LOKY

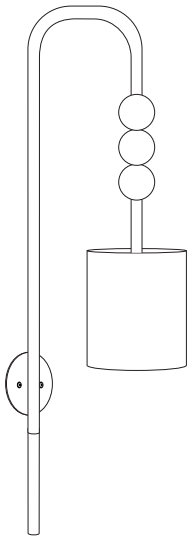

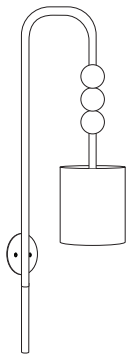

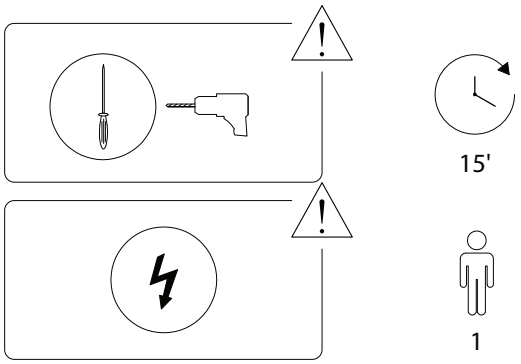

1/6

519/LOKY/080925/

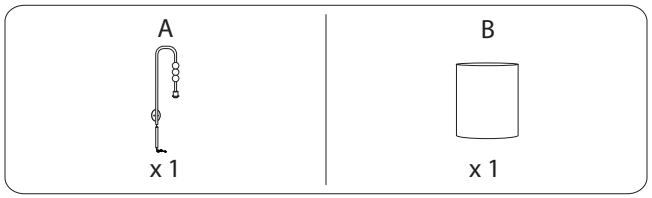

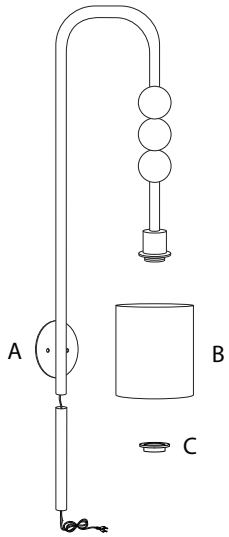

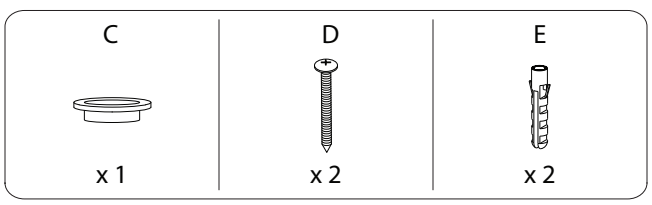

2/6

519/LOKY/080925/

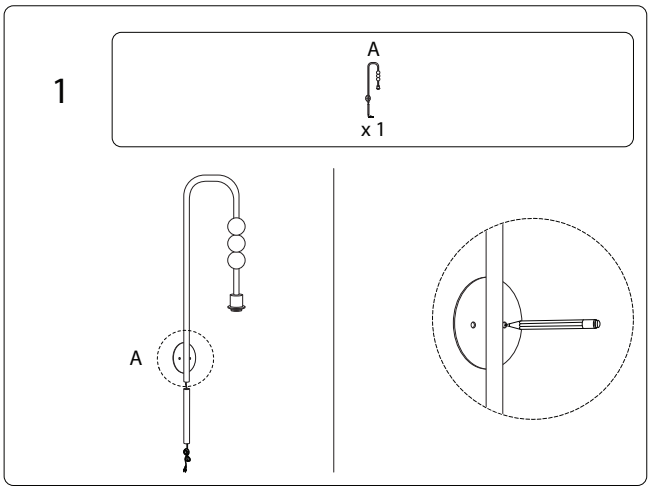

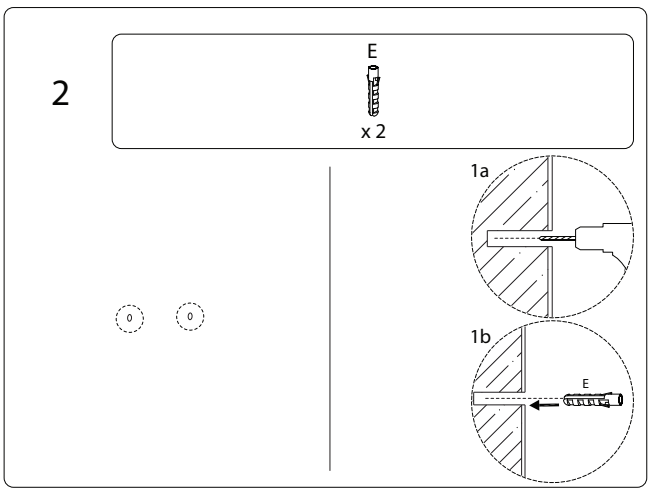

3/6

519/LOKY/080925/

3

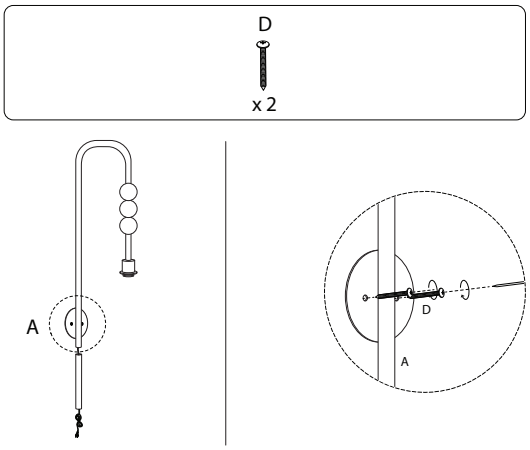

4

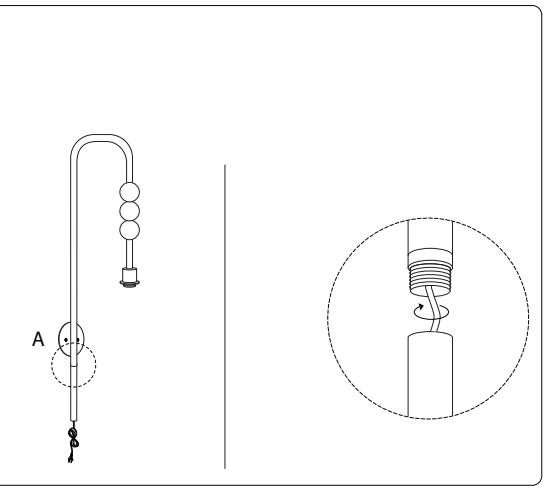

4/6

519/LOKY/080925/

5

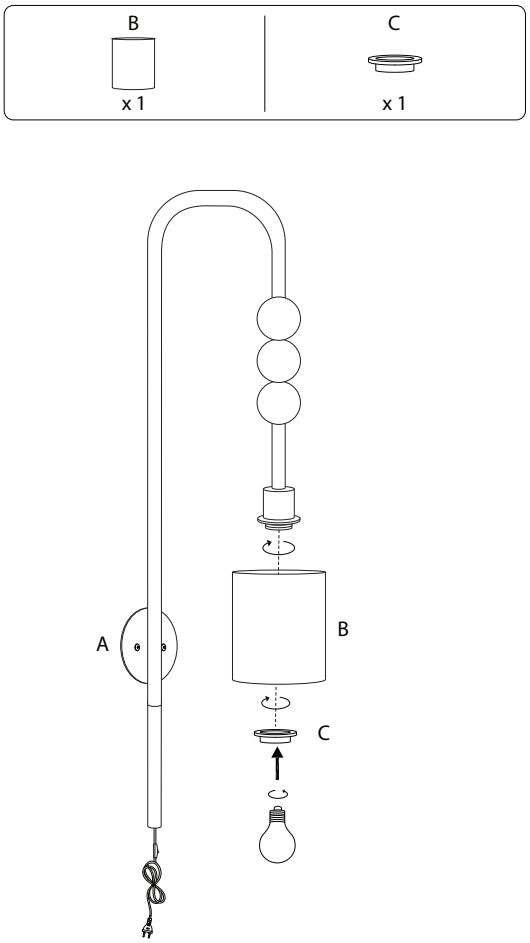

5/6

519/LOKY/080925/

!

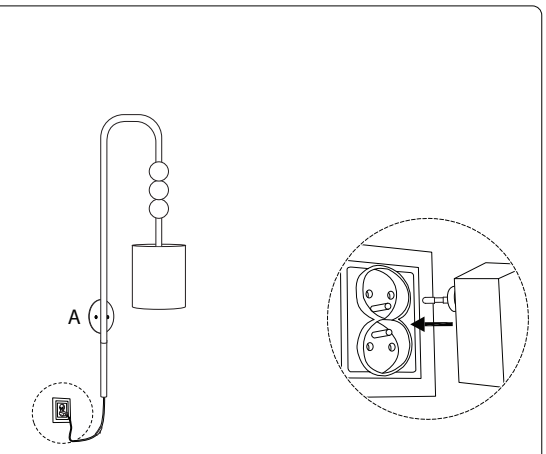

6/6

519/LOKY/080925/