TUCANA

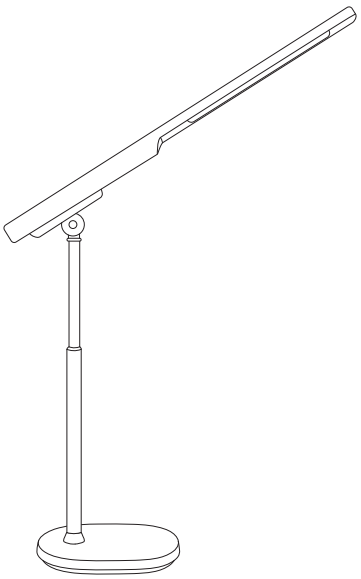

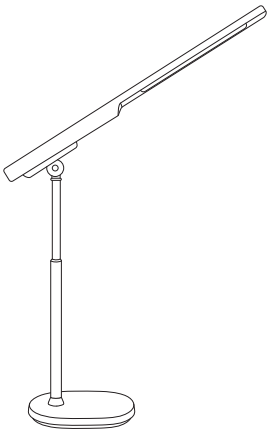

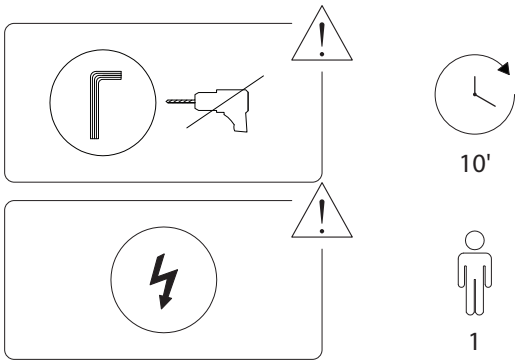

1/4

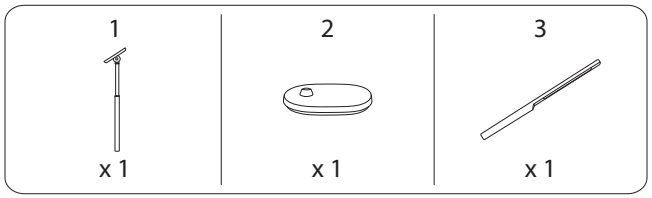

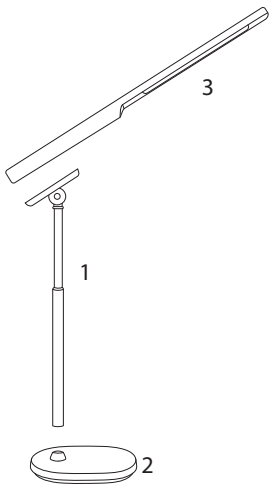

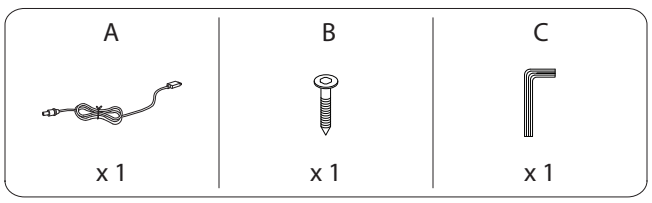

2/4

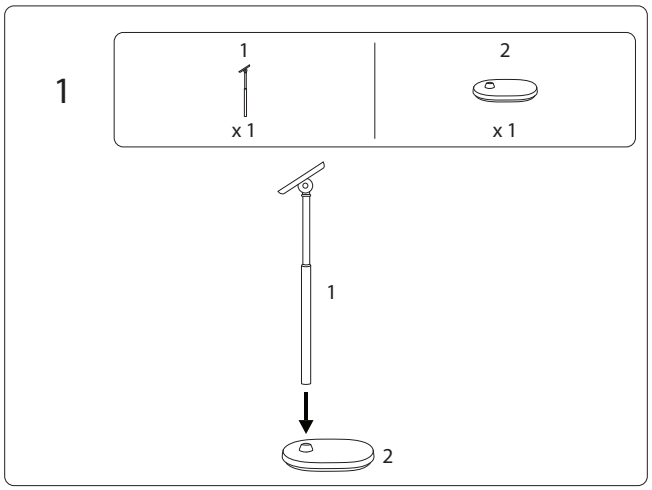

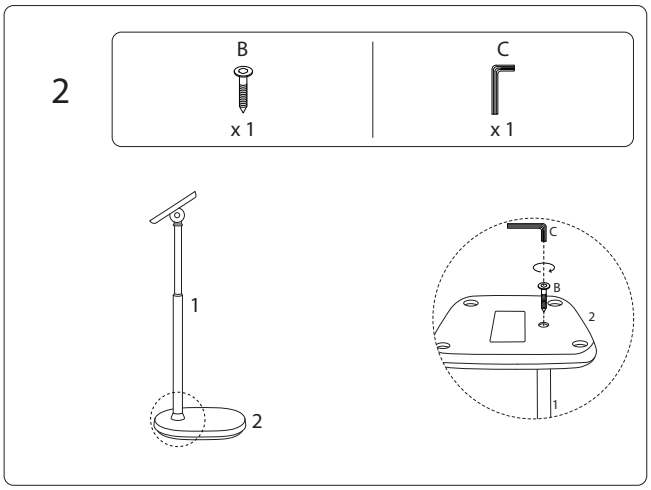

3/4

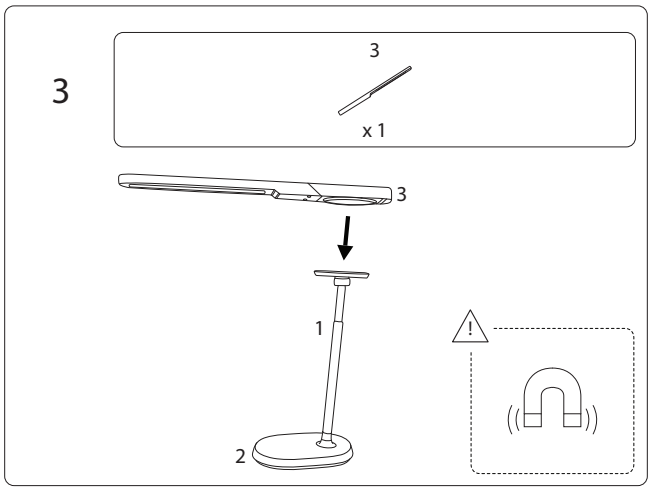

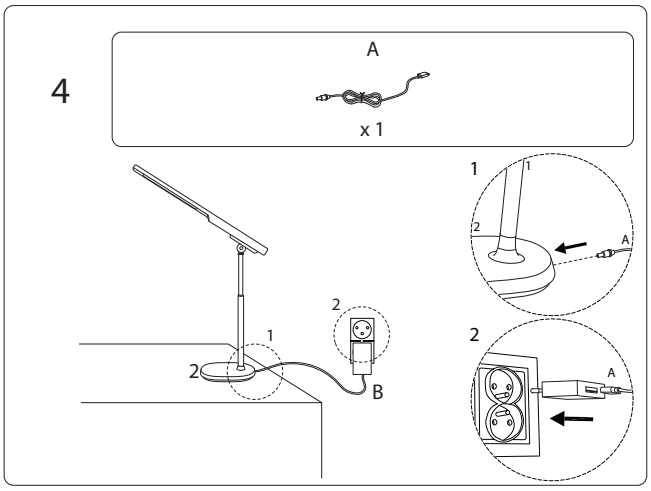

2002/TUCANA/291025/