MEROO

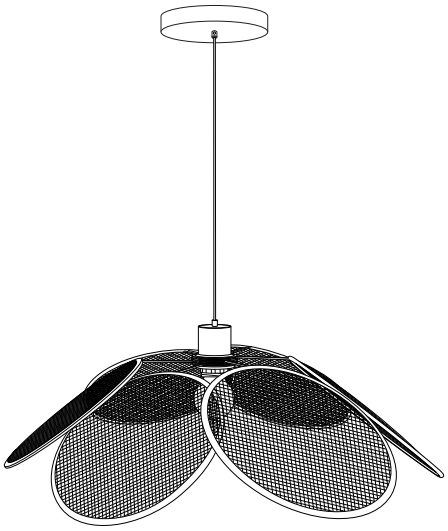

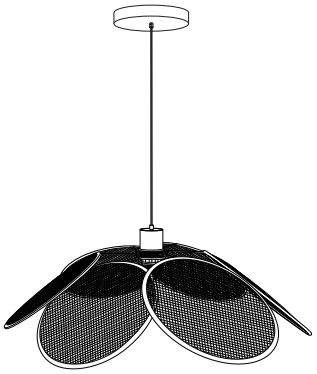

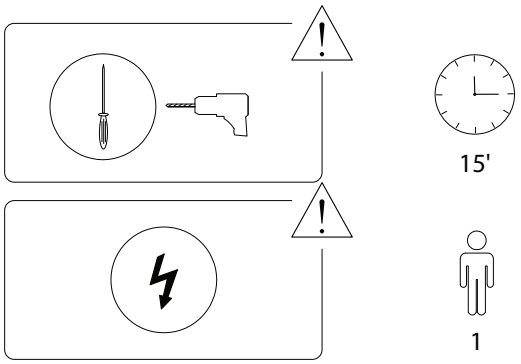

2025/MEROO/090224/

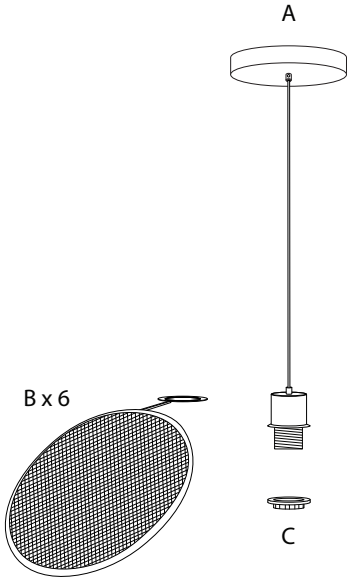

A	B	C	D	E
x 1	x 6	x 1	x 2	x 2

2025/MEROO/090224/

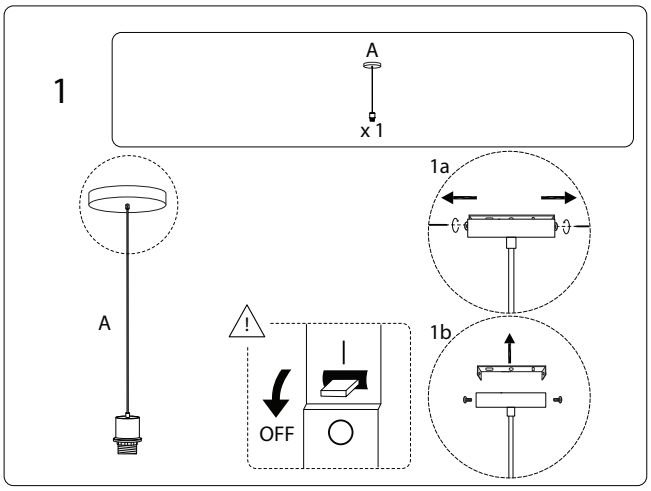

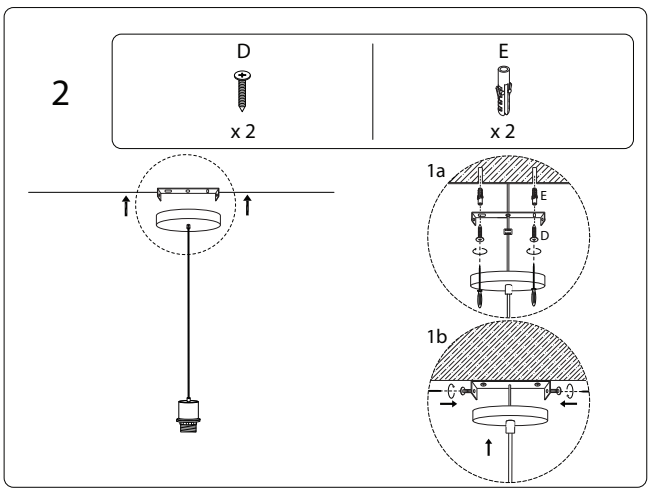

2025/MEROO/090224/

!

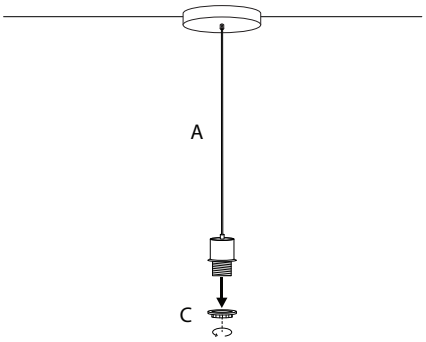

3

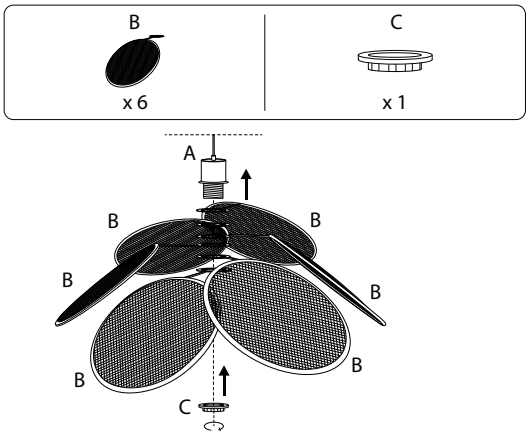

4/6

4

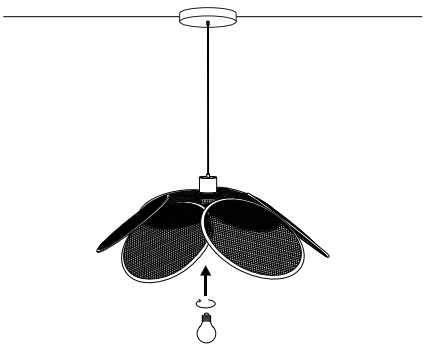

5/6

!

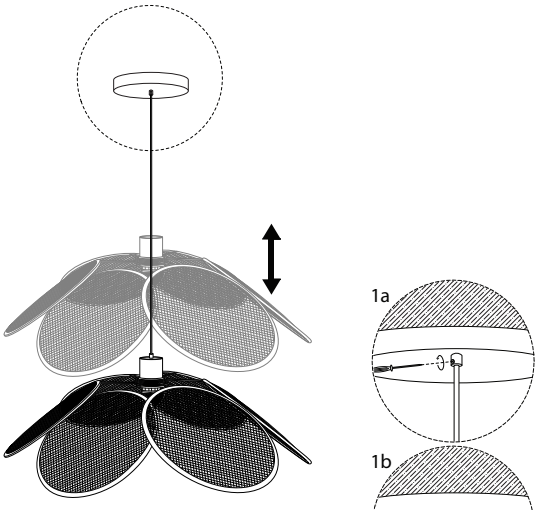

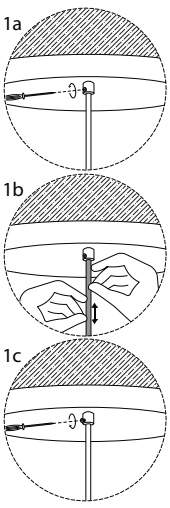

6/6

2025/MEROO/090224/
2025/MEROO/090224/