KANGAROO

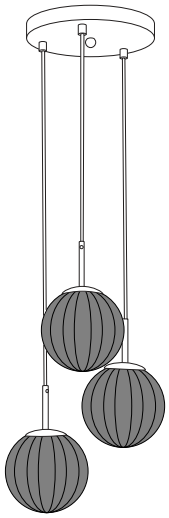

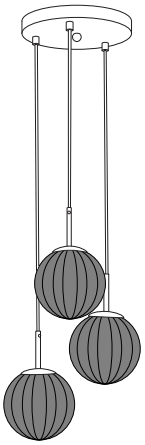

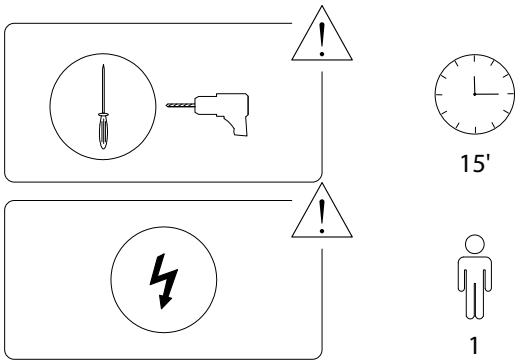

1/5

2025/KANGAROO/150224/

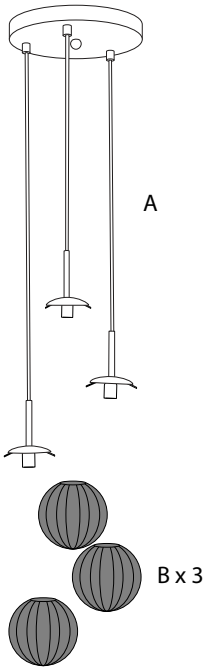

A	B	C	D
			
x 1	x 3	x 2	x 2

2/5

2025/KANGAROO/150224/

!

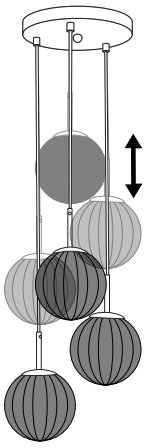

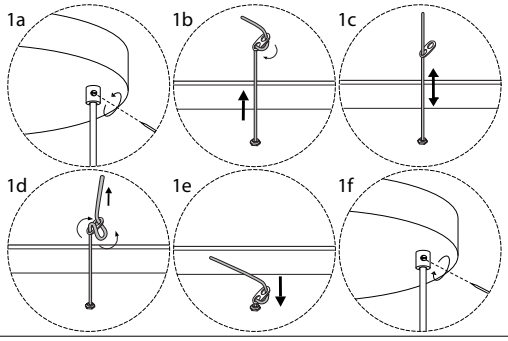

3/5

2025/KANGAROO/150224/

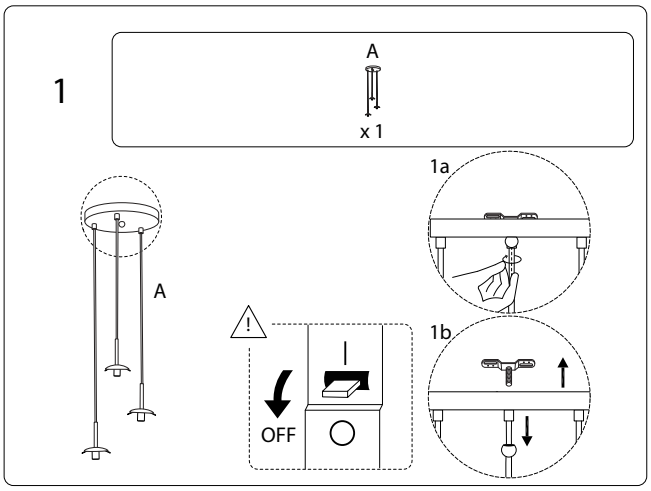

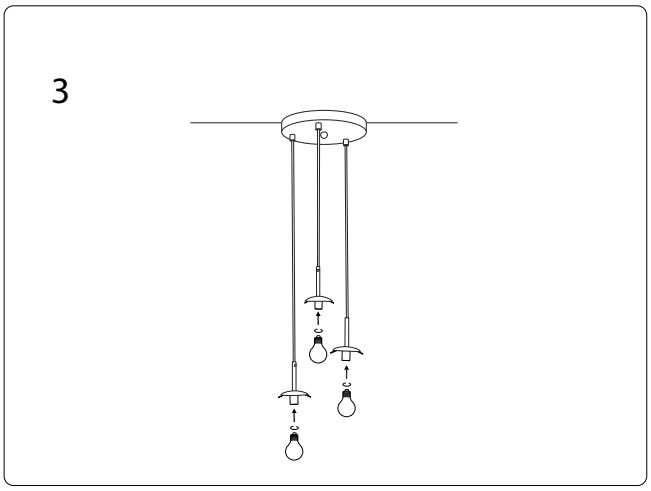

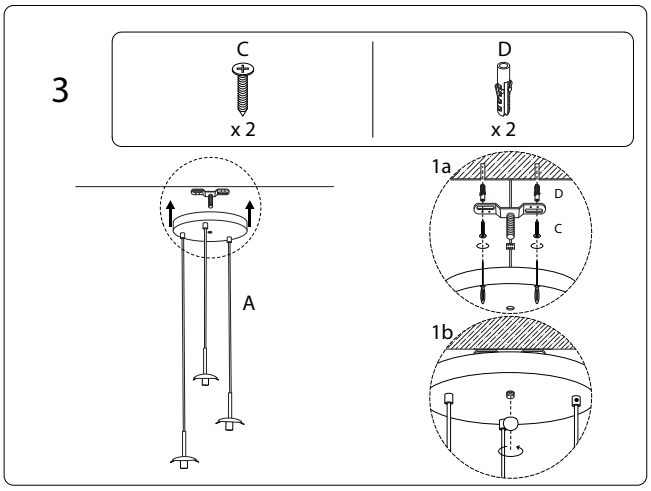

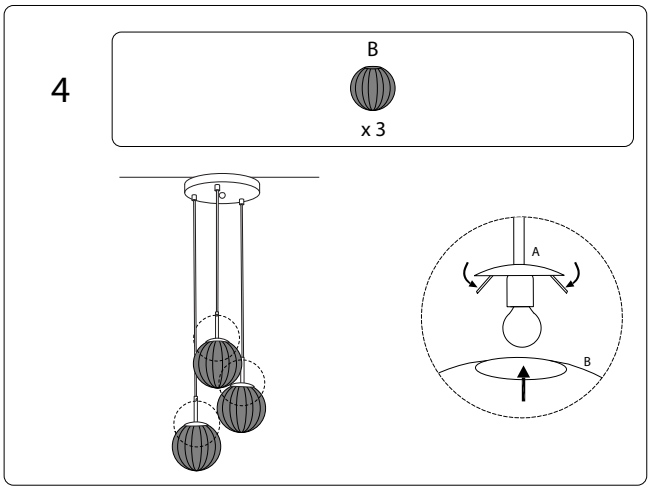

2025/KANGAROO/150224/

2025/KANGAROO/150224/