HYDRUS

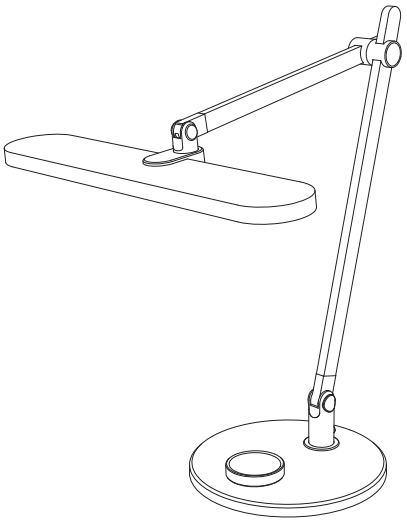

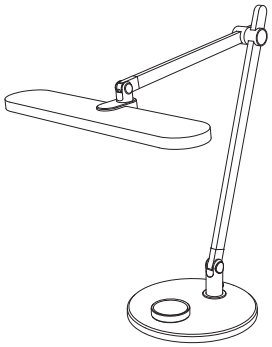

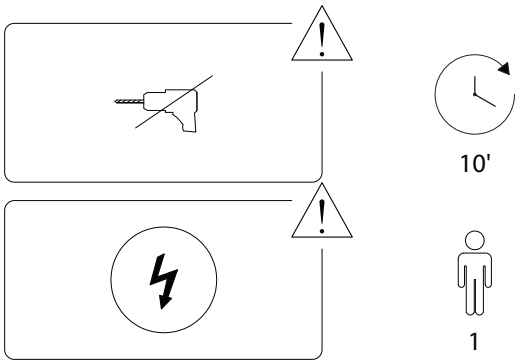

1/5

A	B
	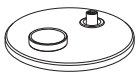
x 1	x 1

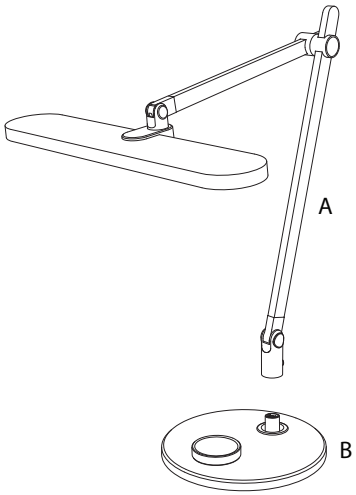

C	D
	
x 1	x 1

2/5

1

A	B
	
x 1	x 1

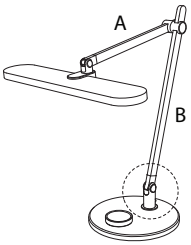

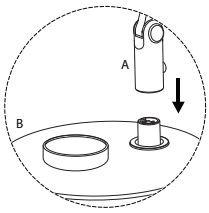

2

C

x 1

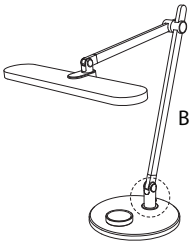

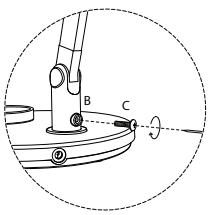

3/5

3

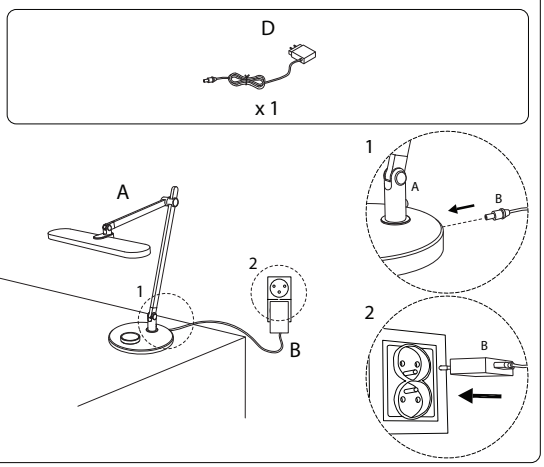

!

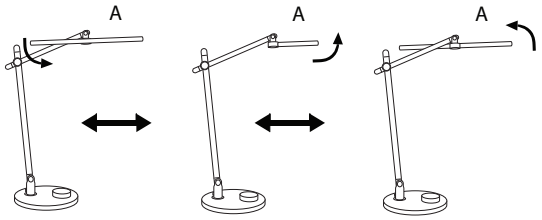

!

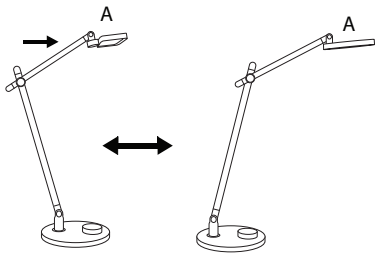

2002/HYDRUS/241025/