Simon Rack
SINCE 1964 - MANUFACTURER

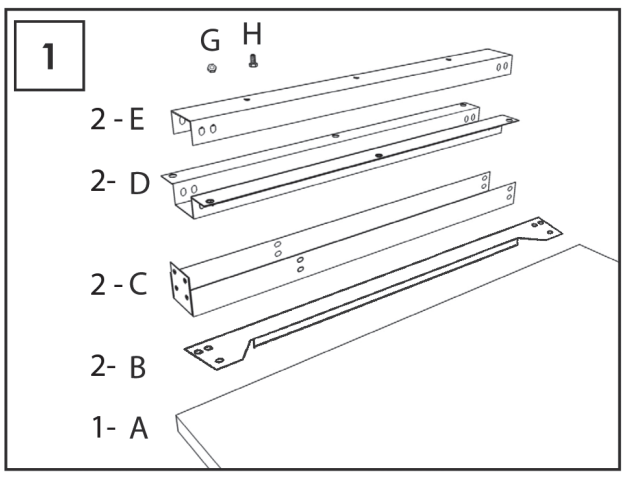

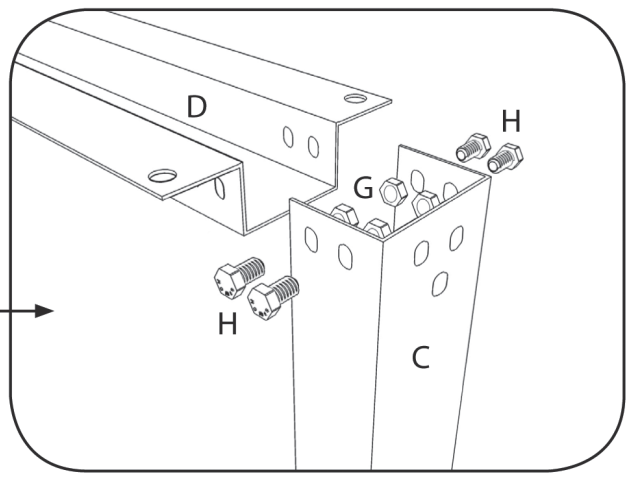

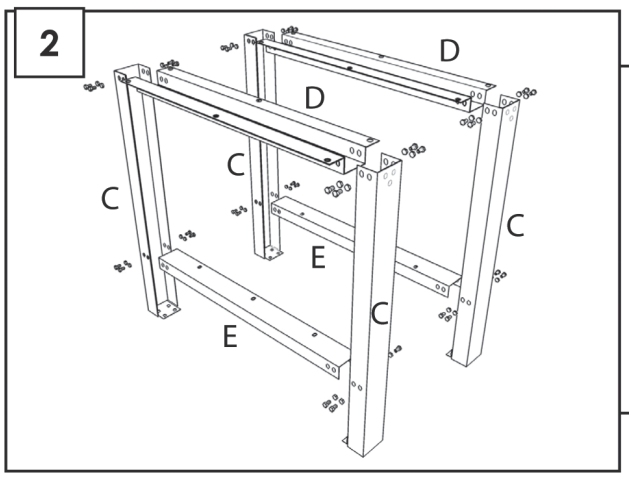

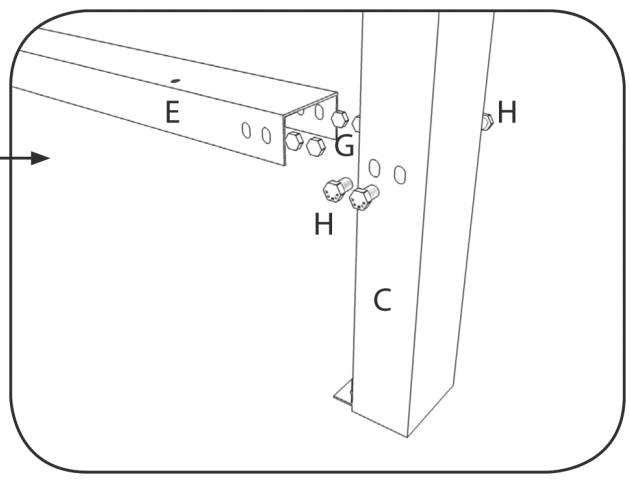

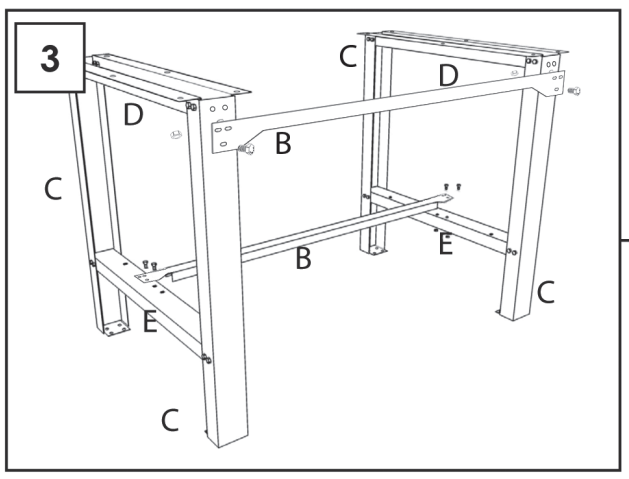

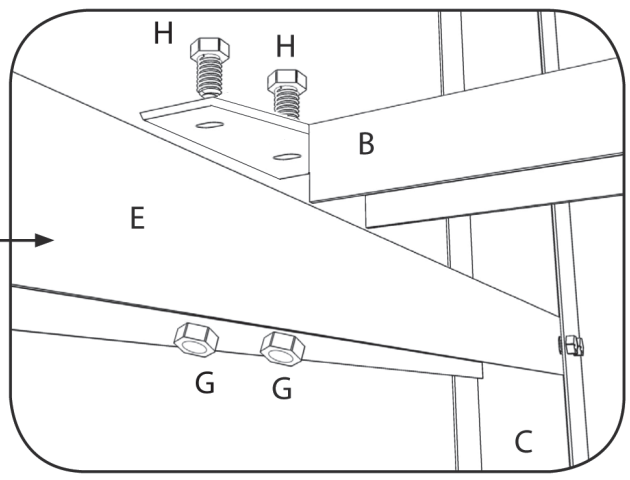

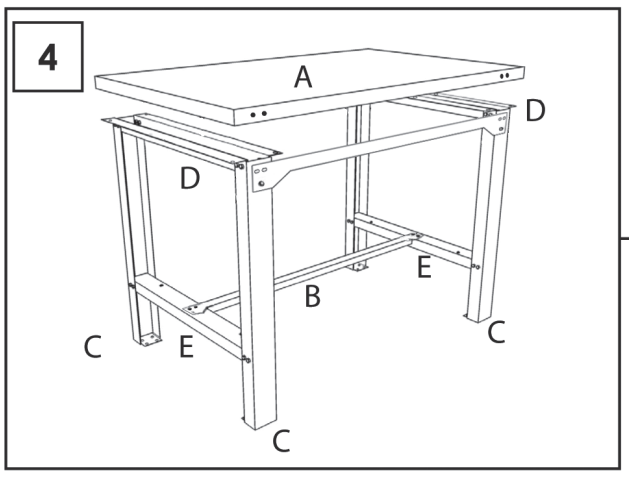

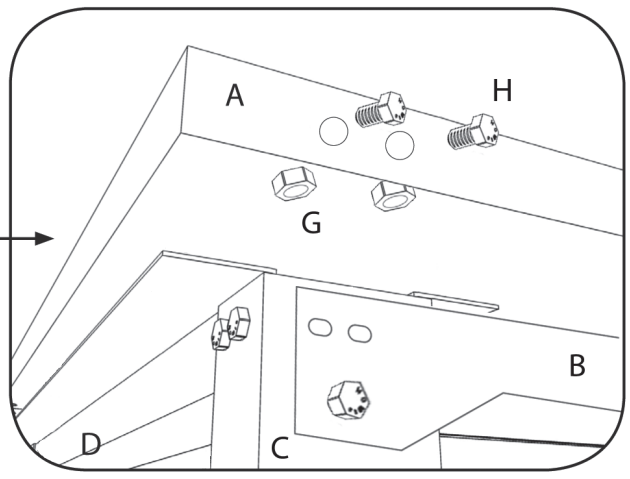

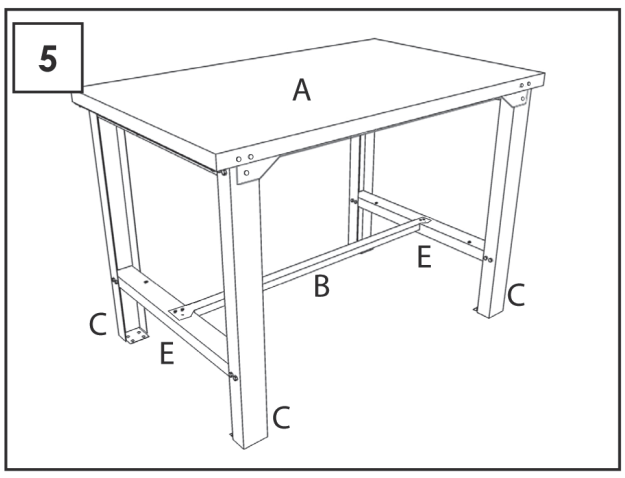

On-line instructions: **www.instructionsrack.com/bt6metal**

www.simonrack.com • www.simonrack.com • www.simonrack.com • www.simonrack.com • www.simonrack.com • www.simonrack.com • www.simonrack.com • www.simonrack.com • www.simonrack.com • www.simonrack.com • www.simonrack.com

SIMONCLASSIC

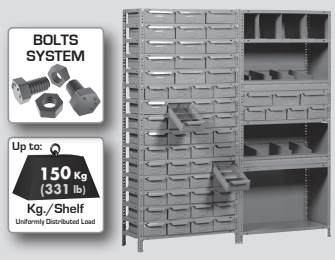

SIMONCLICK

SIMONOFFICE

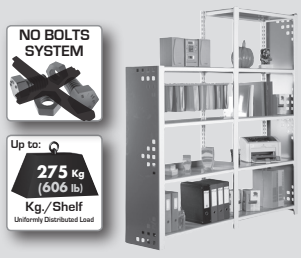

SIMONTALLER

BANCOS DE TRABAJO
WORK BENCHES

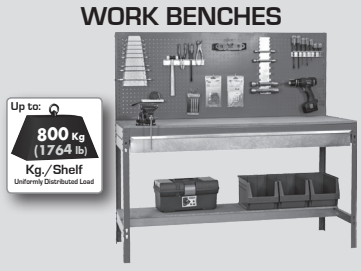

SIMONHOME

TAQUILLAS
LOCKER

SIMONTITÁN

SIMONINOX

SIMONPALET

SIMONLEVER

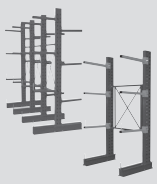

ALTILLOS Y PASILLOS ELEVADOS
PLATFORMS AND MEZZANINES