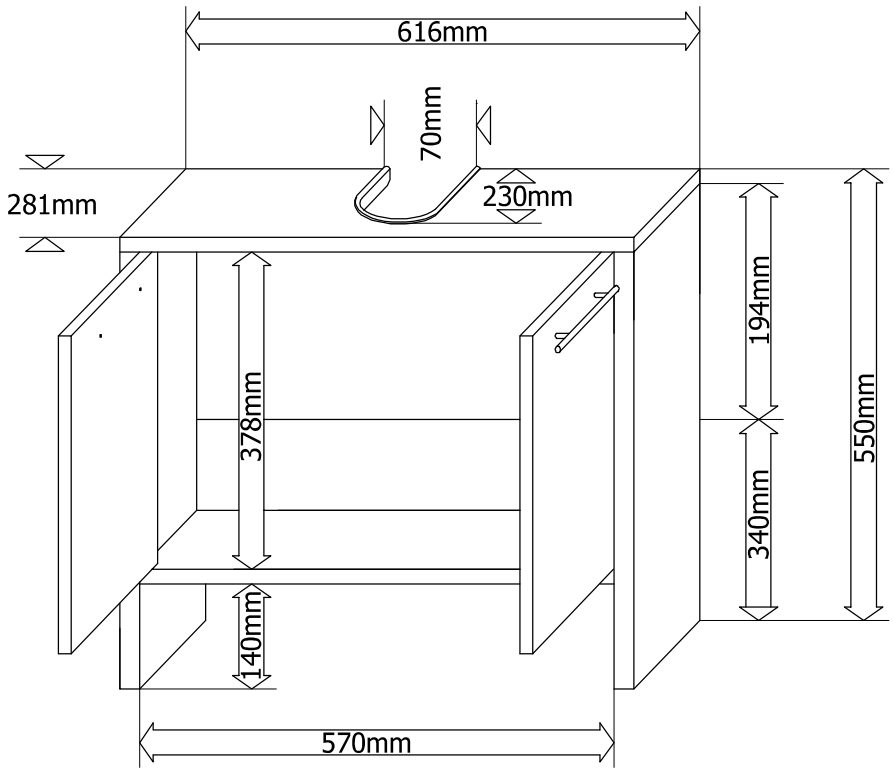
616mm
70mm
281mm
230mm
194mm
550mm
378mm
340mm
140mm
570mm

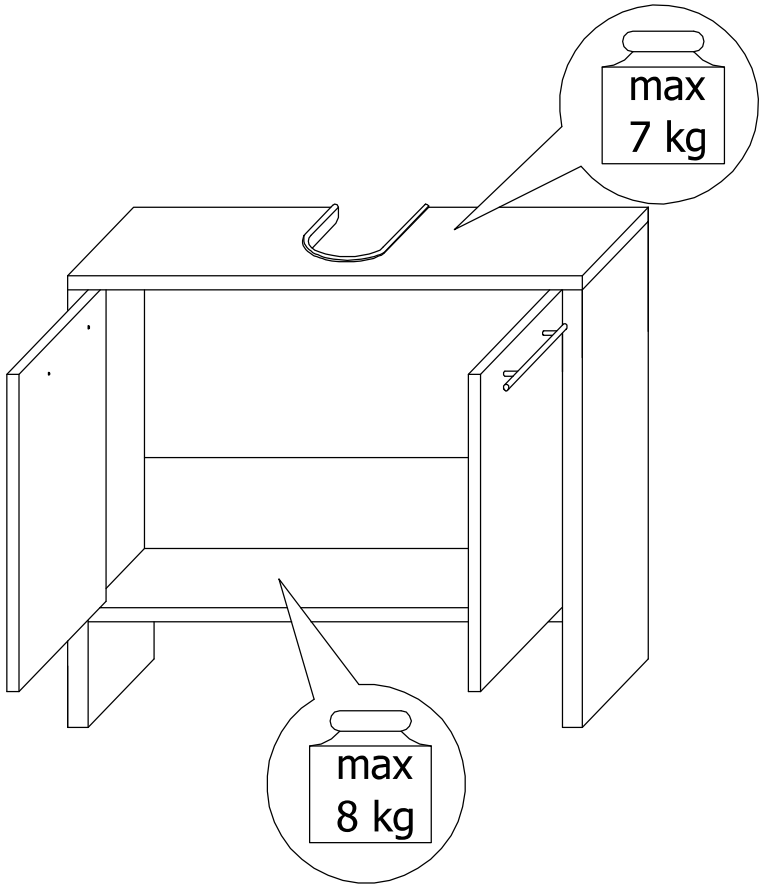
max
7 kg
max
8 kg