Simon Rack
SINCE 1964 - MANUFACTURER

1

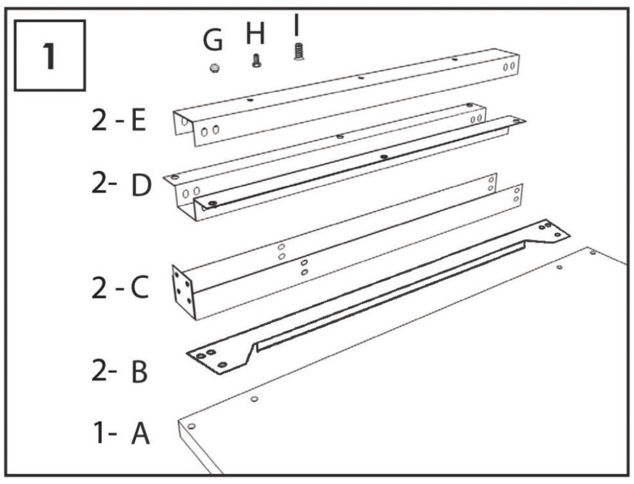

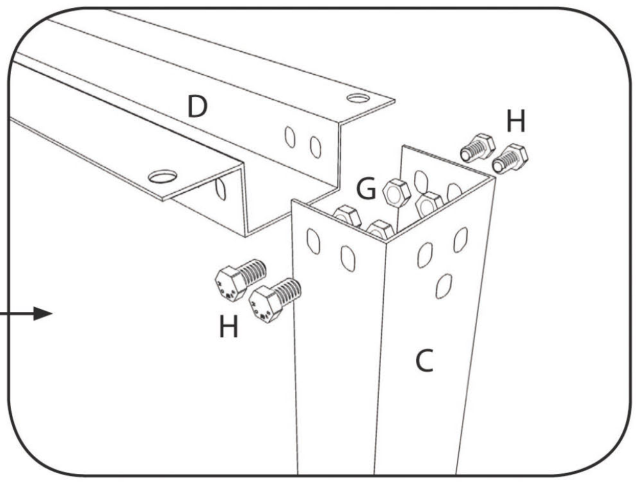

2

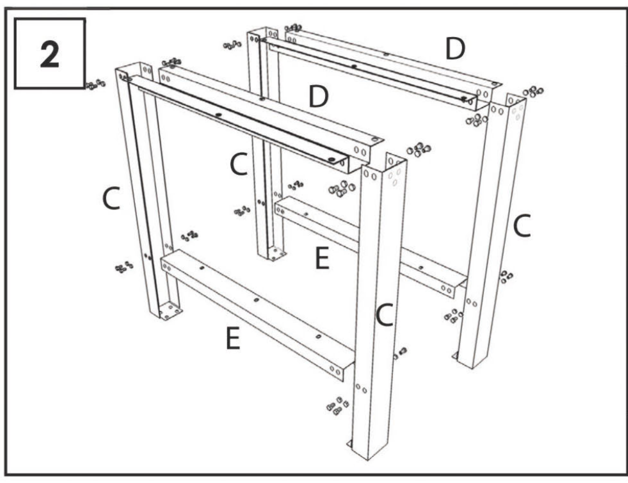

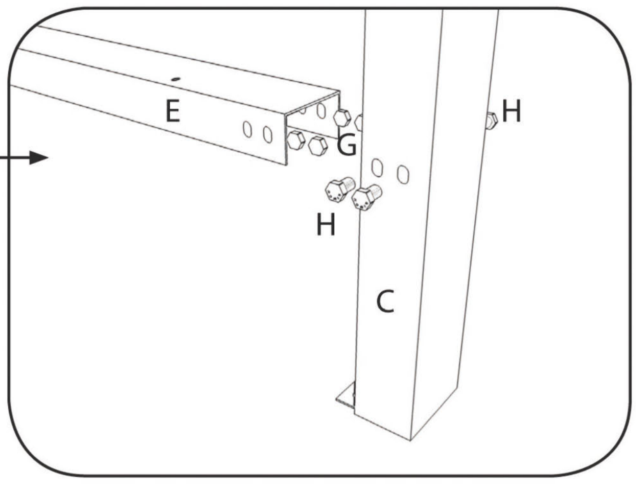

3

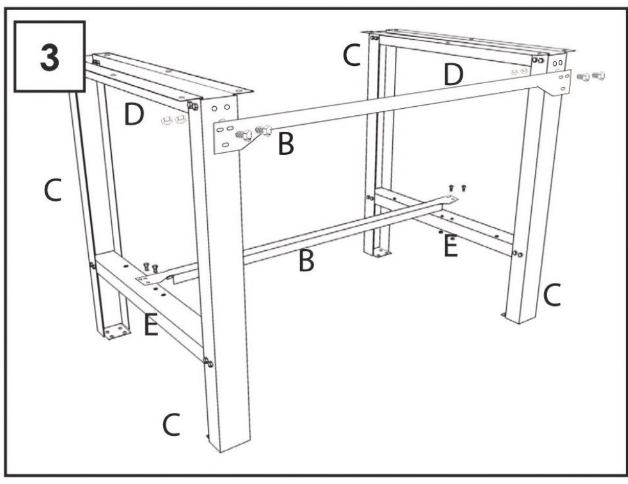

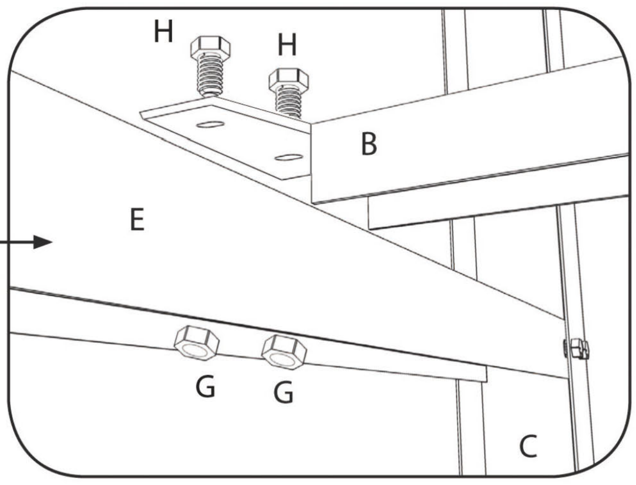

4

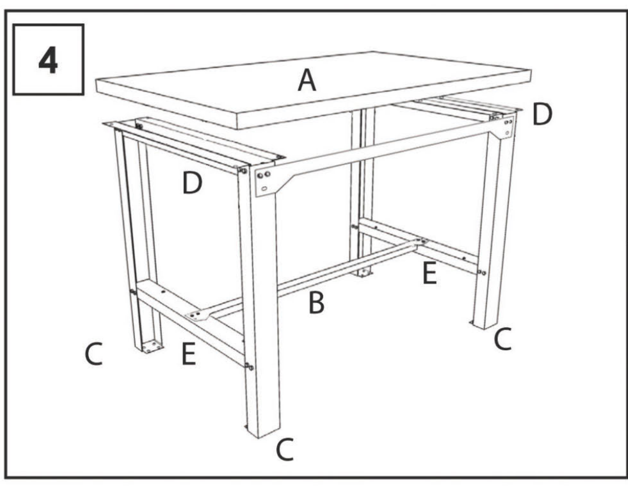

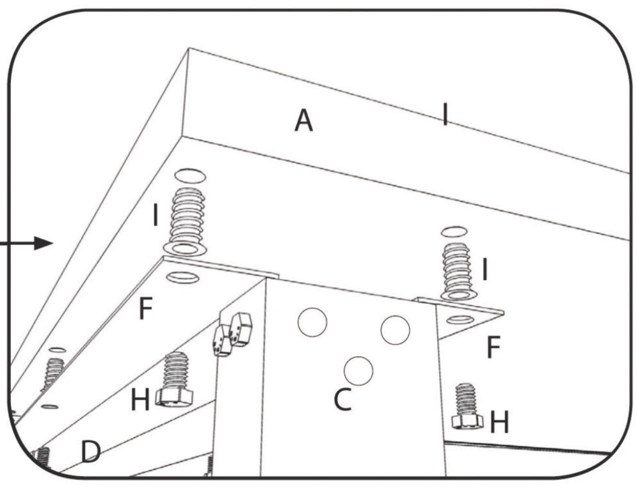

5

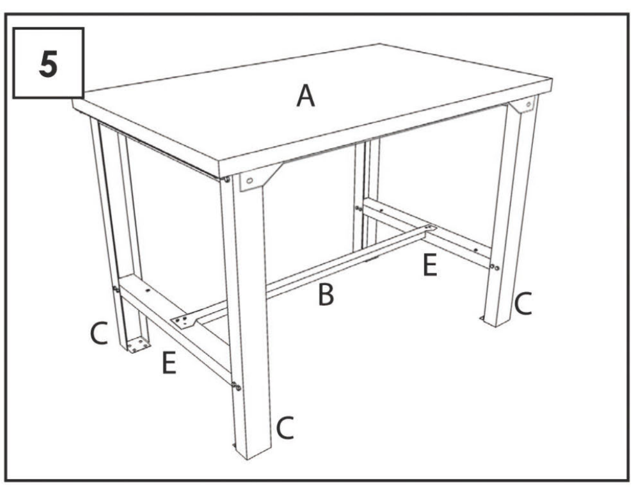

On-line instructions: www.instructionsrack.com/bt6plywood

www.simonrack.com • www.simonrack.com • www.simonrack.com • www.simonrack.com • www.simonrack.com • www.simonrack.com • www.simonrack.com • www.simonrack.com • www.simonrack.com

SIMONCLASSIC

SIMONCLICK

SIMONOFFICE

SIMONTALLER

BANCOS DE TRABAJO
WORK BENCHES

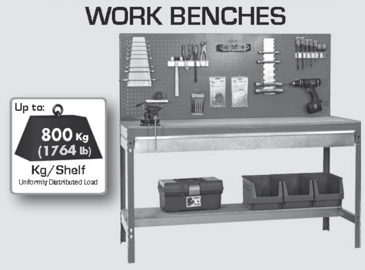

SIMONHOME

TAQUILLAS
LOCKER

SIMONTITÁN

SIMONINOX

SIMONPALET

SIMONLEVER

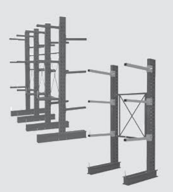

ALTILLOS Y PASILLOS ELEVADOS
PLATFORMS AND MEZZANINES