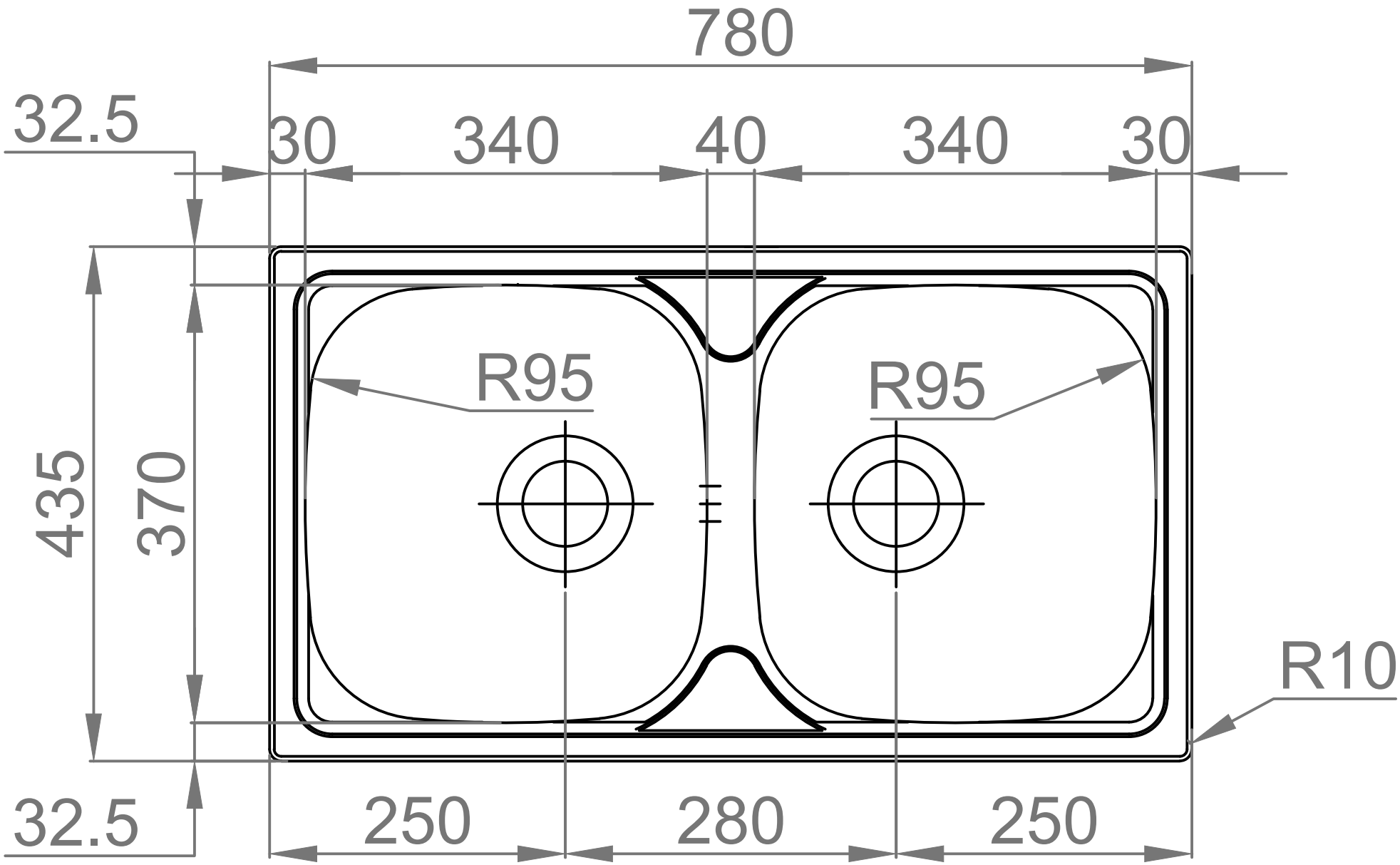
780
32.5
30
340
40
340
30
R95
R95
435
370
R10
32.5
250
280
250